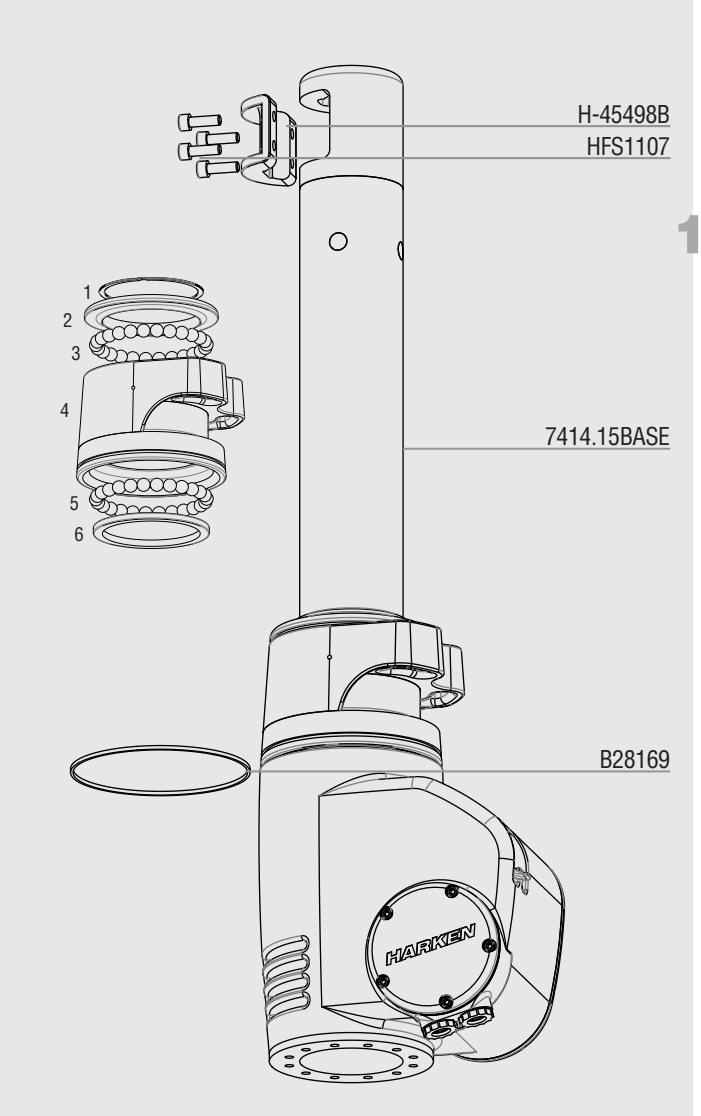

1

No.	Description	Order	Part No.
	Torque Tube Foil Clamp	1	H-45498B
	Torque Tube Screws M8 X 125 mm SHCS	4	HFS1107
	Red Ring	1	B28169
	Lower Unit	**1**	**7414.15BASE**
1	Smalley Ring	1	H-51494
2	Tack Swivel Top Washer	1	H-51493
3	1/2" Torlon Ball	23	HBB21
4	Tack Swivel Body	1	H-51491
5	1/2" Delrin Ball	23	HBB22
6	Tack Swivel Lower Washer	1	H-51492

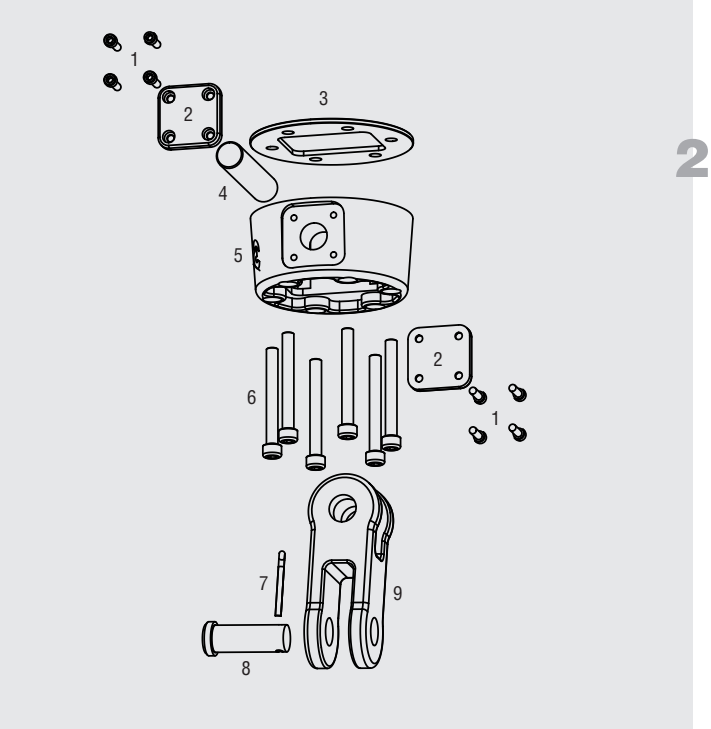

2

No.	Description	Order	Part No.
	Toggle Assembly Hydr 7/8"	**1**	**7414.25 7/8**
1	Toggle Plate Screws M5 X 16 mm SHCS	8	HFS982
2	Toggle Plate	2	H-51477
3	Toggle Housing Insulator	1	H-51475
4	Cross Pin 7/8"	1	H-51476
5	Toggle Housing 7/8"	1	H-51474
6	Toggle Housing Screws M8 X 70 mm SHCS	6	HFS1064
7	Cotter Pin 5/32" X 1.25"	1	HFS203
8	Clevis Pin 7/8" x 1.96" Grip Length	1	H-42404
9	Jaw Jaw Toggle 7/8"	1	H-41489
	Toggle Assembly Hydr 1"	**1**	**7414.25 1**
1	Toggle Plate Screws M5 X 16 mm SHCS	8	HFS982
2	Toggle Plate	2	H-51477
3	Toggle Housing Insulator	1	H-51604
4	Cross Pin 1"	1	H-52453
5	Toggle Housing 1"	1	H-52455
6	Toggle Housing Screws M8 X 70 mm SHCS	6	HFS1064
7	Cotter Pin 3/16" X 2"	1	HFG743
8	Clevis Pin 1" x 2.231" Grip Length	1	H-45435
9	Jaw Jaw Toggle 1"	1	H-45427
	Toggle Assembly Hydr 1 1/8"	**1**	**7414.25 1 1/8**
1	Toggle Plate Screws M5 X 16 mm SHCS	8	HFS982
2	Toggle Plate	2	H-51477
3	Toggle Housing Insulator	1	H-51604
4	Cross Pin 1 1/8"	1	H-51605
5	Toggle Housing 1 1/8"	1	H-51603
6	Toggle Housing Screws M8 X 70 mm SHCS	6	HFS1064
7	Cotter Pin 3/16" X 2"	1	HFG743
8	Clevis Pin 1 1/8" x 2.231" Grip Length	1	H-45436
9	Jaw Jaw Toggle 1 1/8"	1	H-45428

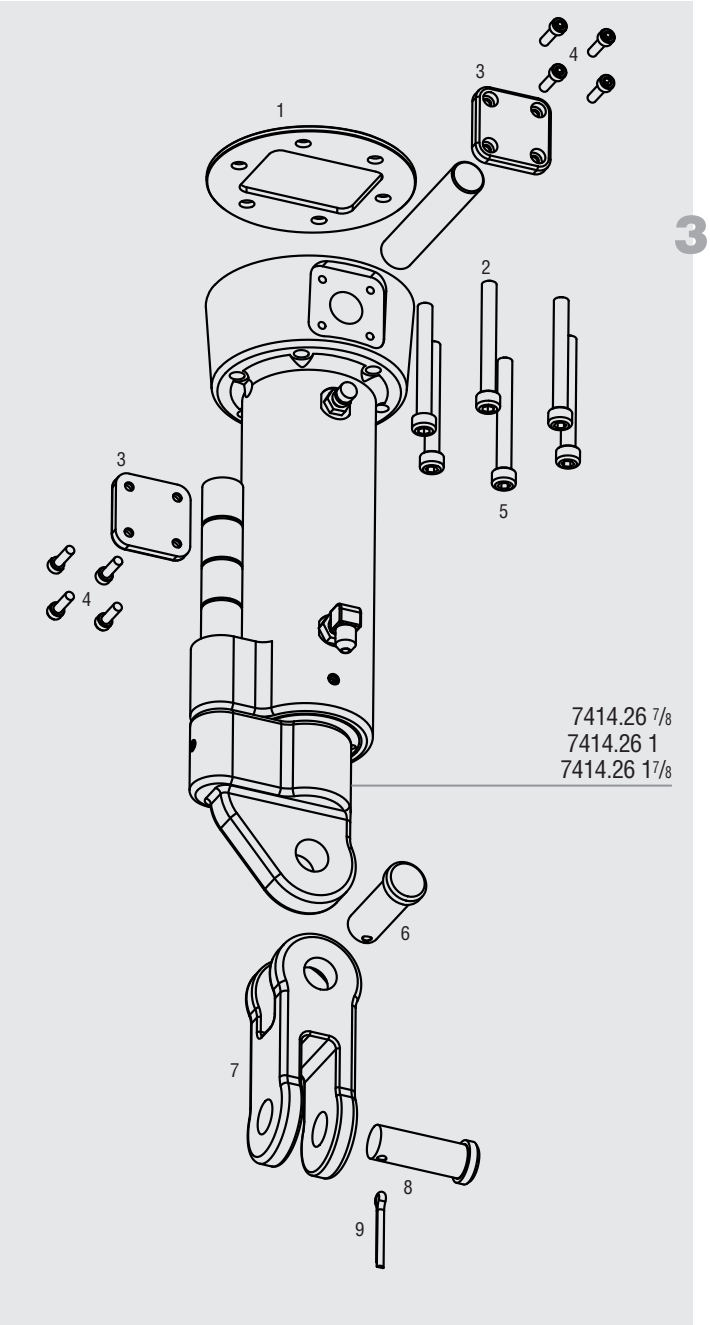

3

No.	Description	Order	Part No.
Hydraulic Cylinder—7/8" Pin		**1**	**7414.26 7/8**
1	Toggle Housing Insulator	1	H-51475
2	Cross Pin 7/8"	1	H-51476
3	Toggle Plate	2	H-51477
4	Toggle Plate Screws M5 X 16 mm SHCS	8	HFS982
5	Toggle Housing Screws M8 X 70 mm SHCS	6	HFS1064
6	Clevis Pin 7/8" x 1.96" Grip Length	2	H-42404
7	Jaw Jaw Toggle 7/8"	1	H-41489
8	Cotter Pin 5/32" X 1.25"	1	HFS203
Hydraulic Cylinder—1" Pin		**1**	**7414.26 1**
1	Toggle Housing Insulator	1	H-51604
2	Cross Pin 1"	1	H-52453
3	Toggle Plate	2	H-51477
4	Toggle Plate Screws M5 X 16 mm SHCS	8	HFS982
5	Toggle Housing Screws M8 X 70 mm SHCS	6	HFS1064
6	Clevis Pin 1" x 2.231" Grip Length	2	H-45435
7	Jaw Jaw Toggle 1"	1	H-45427
8	Cotter Pin 3/16" X 2"	1	HFG743
Hydraulic Cylinder—1 1/8" Pin		**1**	**7414.26 1 1/8**
1	Toggle Housing Insulator	1	H-51604
2	Cross Pin 1 1/8"	1	H-51605
3	Toggle Plate	2	H-51477
4	Toggle Plate Screws M5 X 16 mm SHCS	8	HFS982
5	Toggle Housing Screws M8 X 70 mm SHCS	6	HFS1064
6	Clevis Pin 1 1/8" x 2.526" Grip Length	2	H-45436
7	Jaw Jaw Toggle 1 1/8"	1	H-45428
8	Cotter Pin 3/16" X 2"	1	HFG743

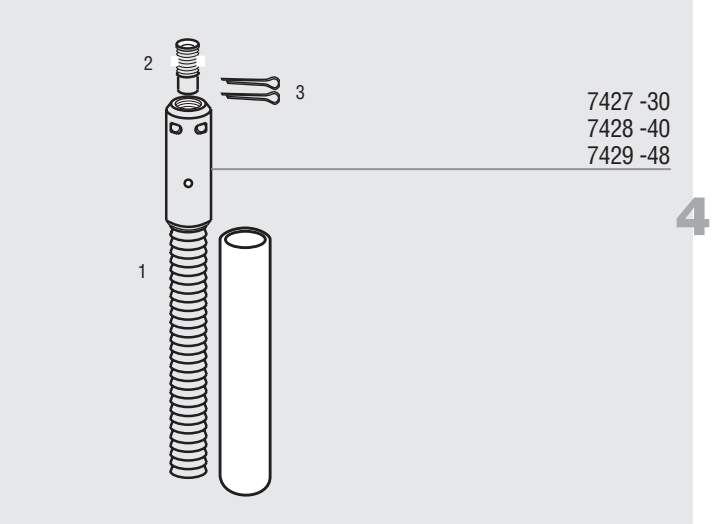

4

No.	Description	Order	Part No.
Rod Adapter Stud w/Nosepiece -30 Rod		**1**	**7427 -30**
1	Stud (Main Body)	1	H-41814
2	Nosepiece -30	1	H-41813
3	Cotter Pin 3/32" x 1.750"	2	HFG319
	Stud Cap 7/8" ID	1	HFG303
Rod Adapter Stud w/Nosepiece -40 Rod		**1**	**7428 -40**
1	Stud (Main Body)	1	H-47146
2	Nosepiece -40	1	H-47131
3	Cotter Pin (3/32" x 1.750")	2	HFG319
Rod Adapter Stud w/Nosepiece -48 Rod		**1**	**7429 -48**
1	Stud (Main Body)	1	H-47147
2	Nosepiece -48	1	H-47132
3	Cotter Pin (3/32" x 1.750")	2	HFG319

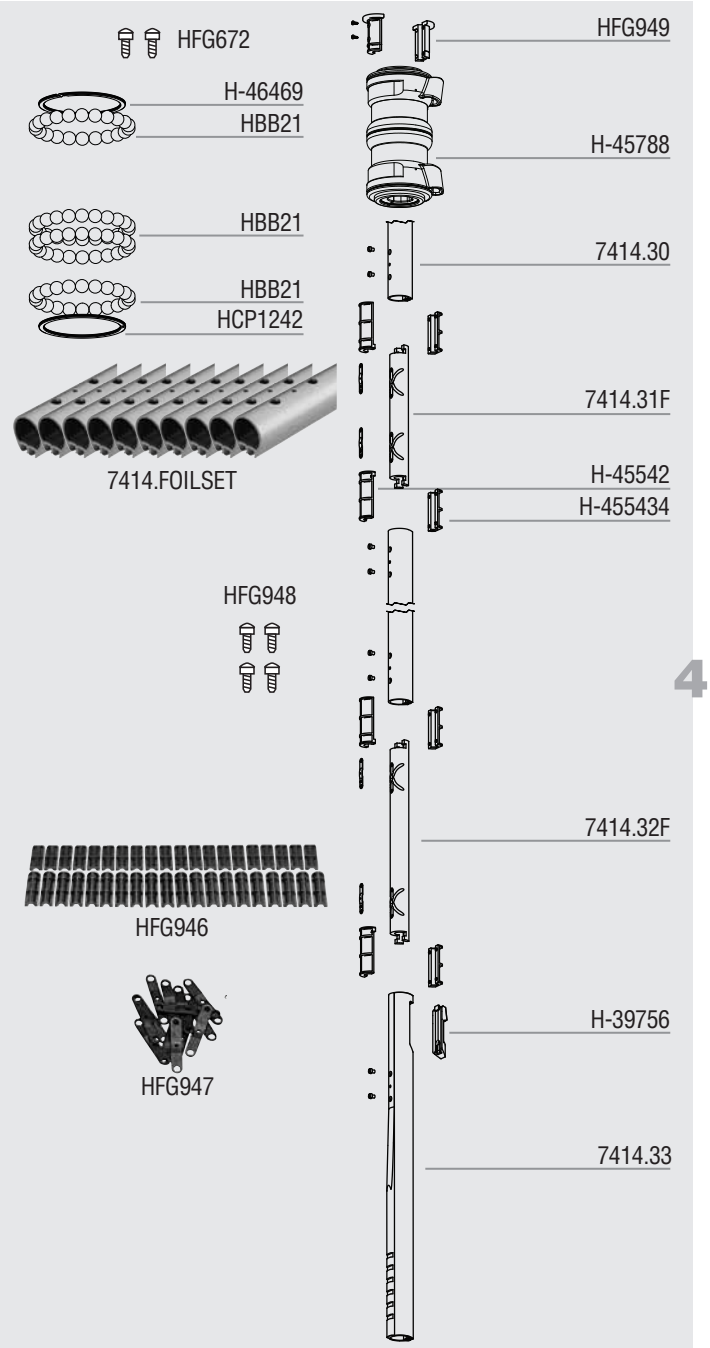

	Description	Order	Part No.
4	**Trim Cap Set w/o Screws**	**1**	**HFG949**
	Trim Cap Screw Set	**1**	**HFG672**
	Trim Cap Screw	2	HFS1127
	Halyard Swivel	**1**	**H-45788**
	Clip/Smally Ring for Balls	1	H-46469
	Clip/Smally Ring for Liners	1	HCP1292
	Torlon Ball Bearings (1/2")	100	HBB21
	Foil Set	**1**	**7414.FOILSET**
	Foil (7' / 2.13 m Luff)	10	7414.30
	Foil (2' / 610 mm) Bottom	**1**	**7414.33**
	Foil Screw Set	**1**	**HFG948**
	Foil Screw	48	HFS1176
	Connector	**9**	**7414.31F**
	Bottom Connector (9 3/4" / 247 mm)	**1**	**7414.32F**
	Connector Bushing Set	**1**	**HFG946**
	Connector Bushing Top (Curved/Longer)	23	H-45542
	Connector Bushing Bottom (Flat/Shorter)	23	H-45543
	Plastic Connector Wedge Set	**1**	**HFG947**
	Plastic Connector Wedge	24	H-45509
	Feeder Tab	**1**	**H-45482**
	Screw	**1**	**HFS1175**

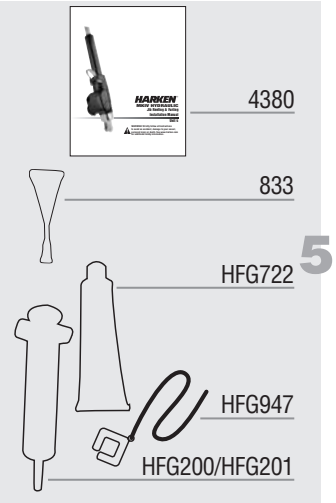

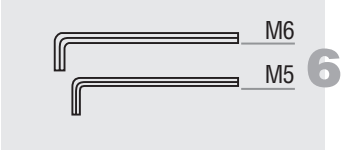

	Description	Order	Part No.
5	**Instruction Manual**	**1**	**4380**
	Blue Loctite®	**1**	**833**
	5200 Adhesive Set	**1**	**HFG725**
	5200 Marine Adhesive Sealant	1	HFG722
	Injector	1	HFG200 HFG201
	Prefeeder	**1**	**947**

	Description	Order	Part No.
6	**Allen Wrenches**		
	M6	1	HFG644
	M5	1	HFG643

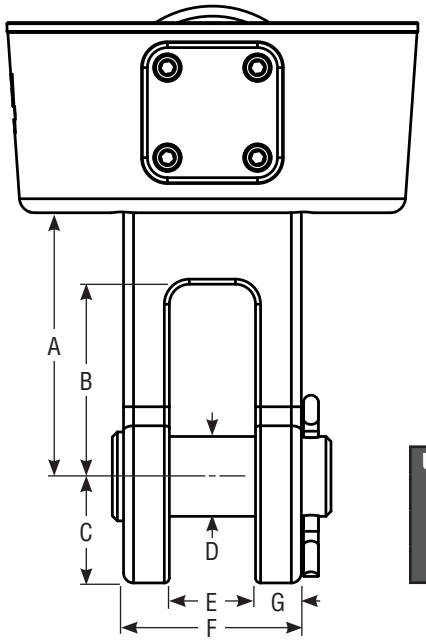

Unit	Part No.
4H	7414.25 7/8
	7414.25 1
	7414.25 1 1/8

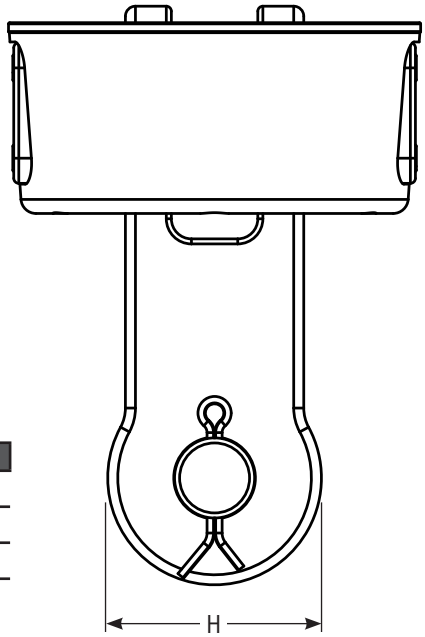

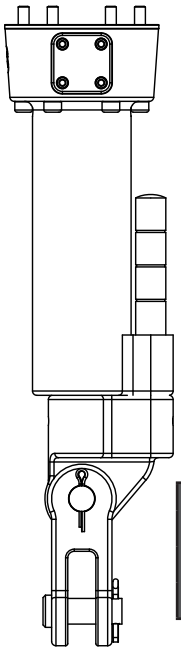

Unit	Part No.
4H	7414.26 7/8
	7414.26 1
	7414.26 1 1/8

Toggle Dimensions*

A		B		C		D		E		F		G		H	
in	mm	in	mm	in	mm	in	mm	in	mm	in	mm	in	mm	in	mm
7414.25 7/8, 7414.26 7/8*															
2.600	66.05	2.000	50.81	1.156	29.37	0.868	22.05	0.940	23.88	1.938	49.23	0.499	12.67	2.312	58.72
7414.25 1, 7414.26 1															
3.292	83.61	2.400	60.96	1.330	33.78	0.997	25.32	1.076	27.33	2.220	56.39	0.572	14.53	2.660	67.56
7414.25 1 1/8, 7414.26 1 1/8*															
3.739	94.97	2.700	68.58	1.507	38.28	1.122	28.50	1.210	30.73	2.524	64.11	0.657	16.69	3.014	76.56

*Toggle dimensions apply to standard toggle and cylinder option except A does not apply to cylinder